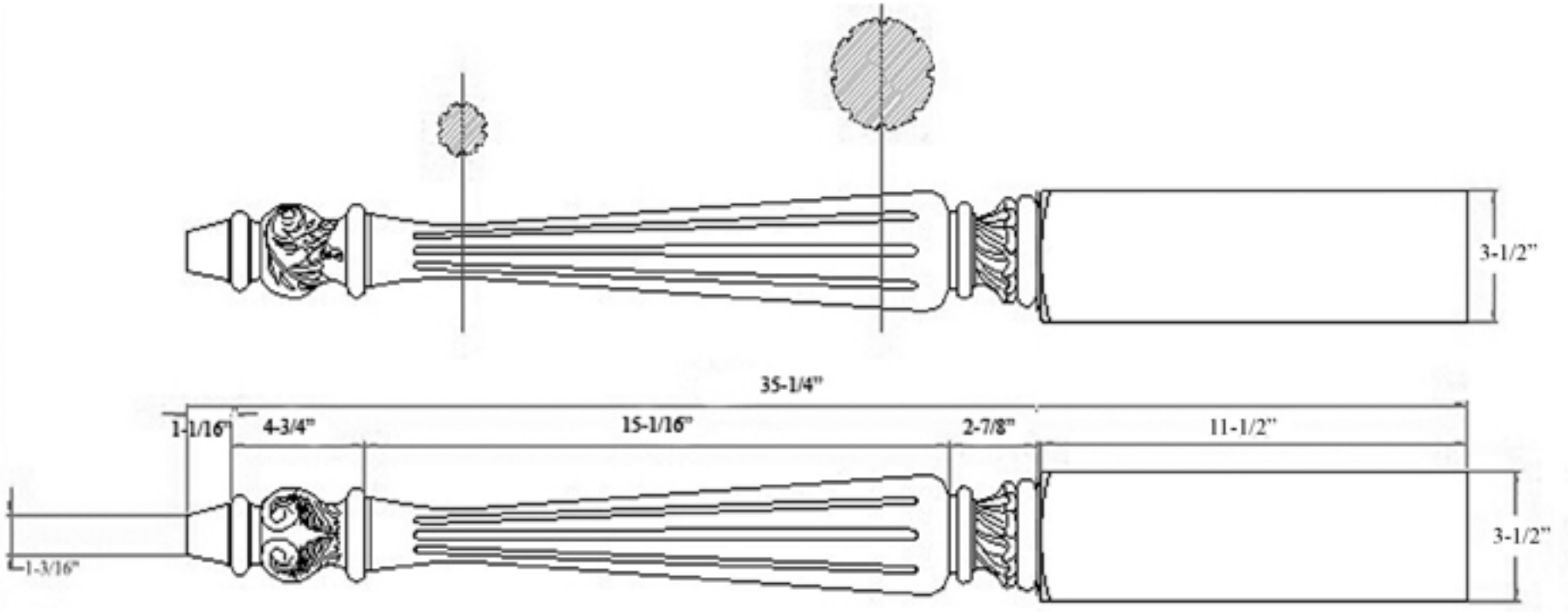
3-1/2"
35-1/4"
1-1/16"
4-3/4"
15-1/16"
2-7/8"
11-1/2"
3-1/2"
1-3/16"