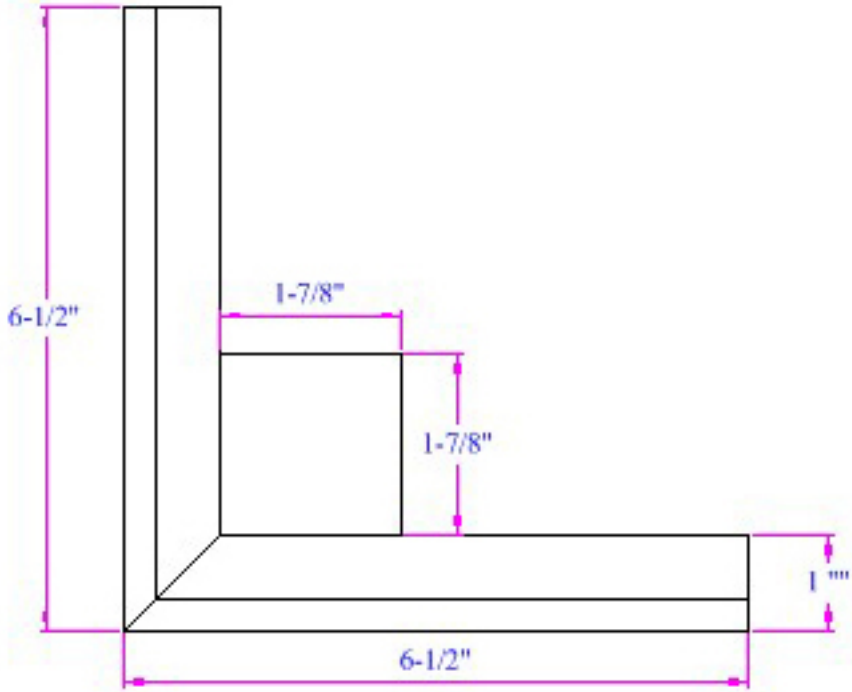
6-1/2"
1-7/8"
1-7/8"
1 ""
6-1/2"

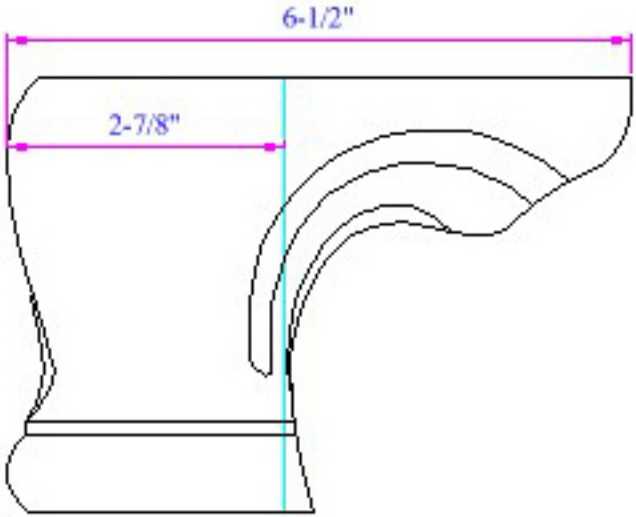
6-1/2"
2-7/8"

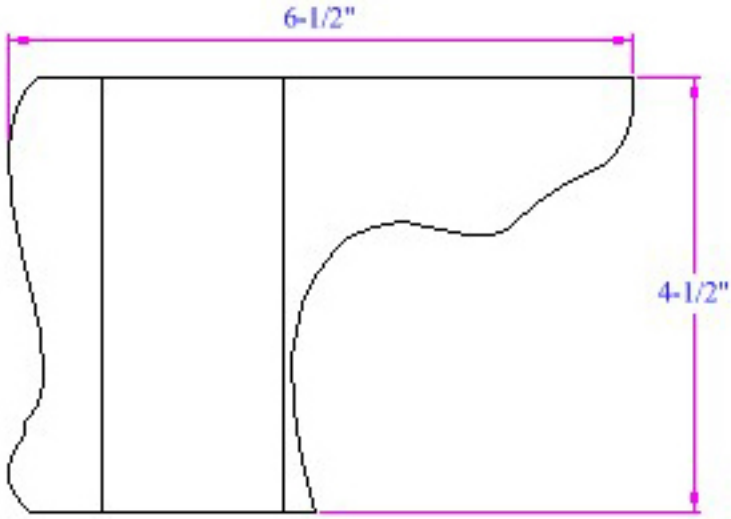
6-1/2"
4-1/2"