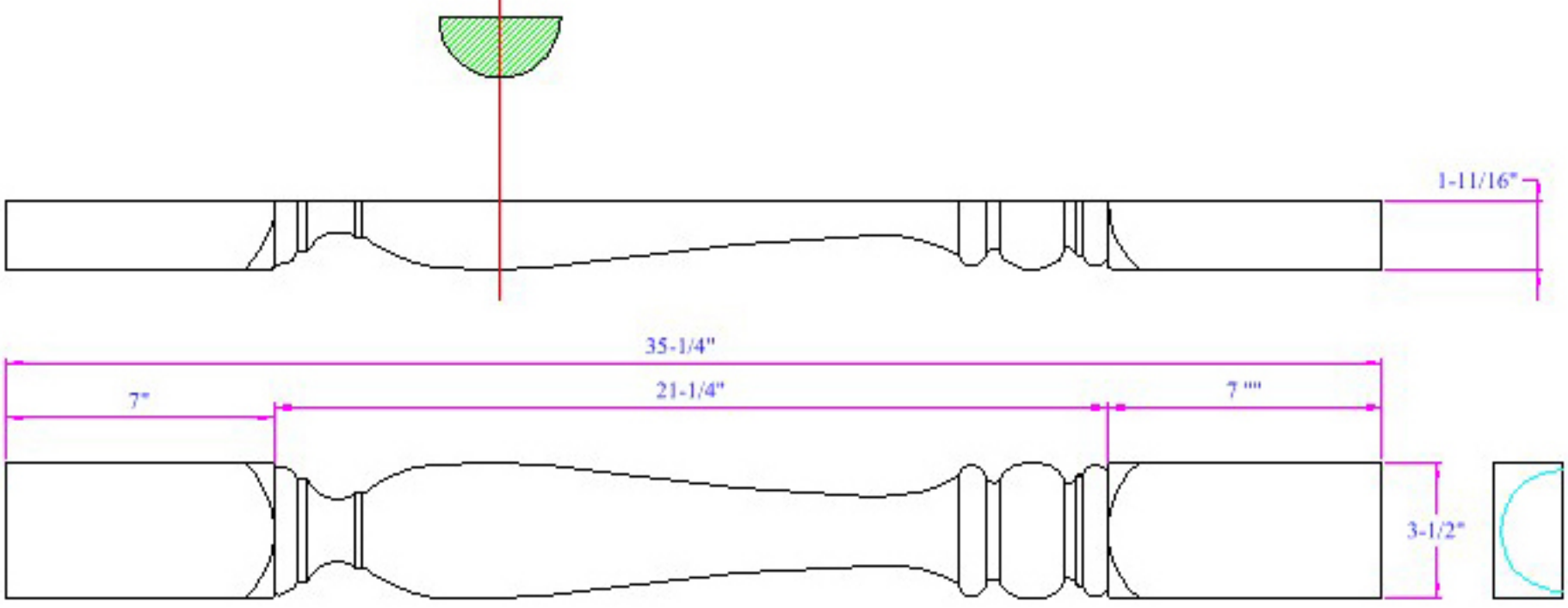
1-11/16"
35-1/4"
7"
21-1/4"
7 ""
3-1/2"